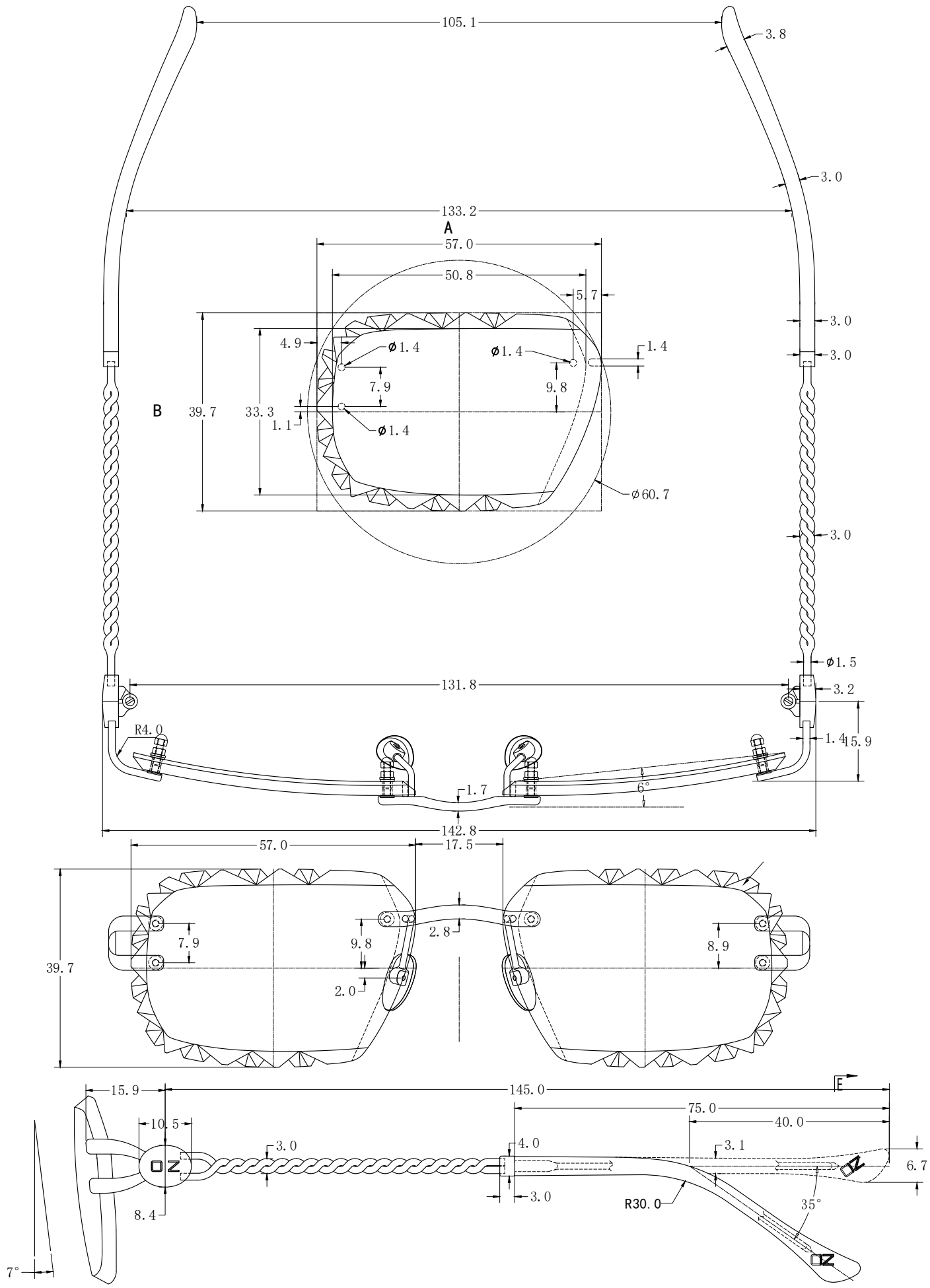

eye to eye	STYLE: FRANCK	SIZE: 57-17-145	2025. 10. 01