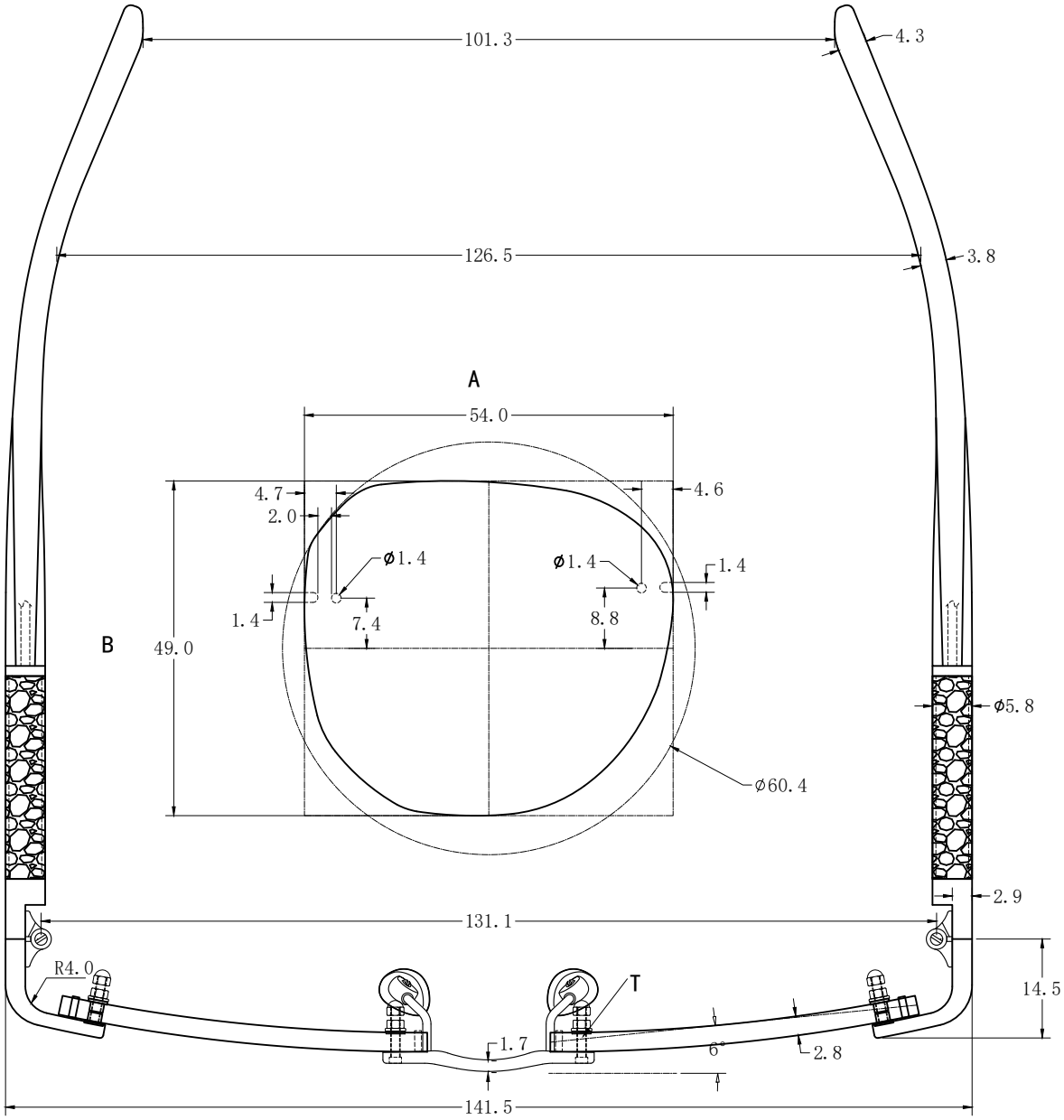

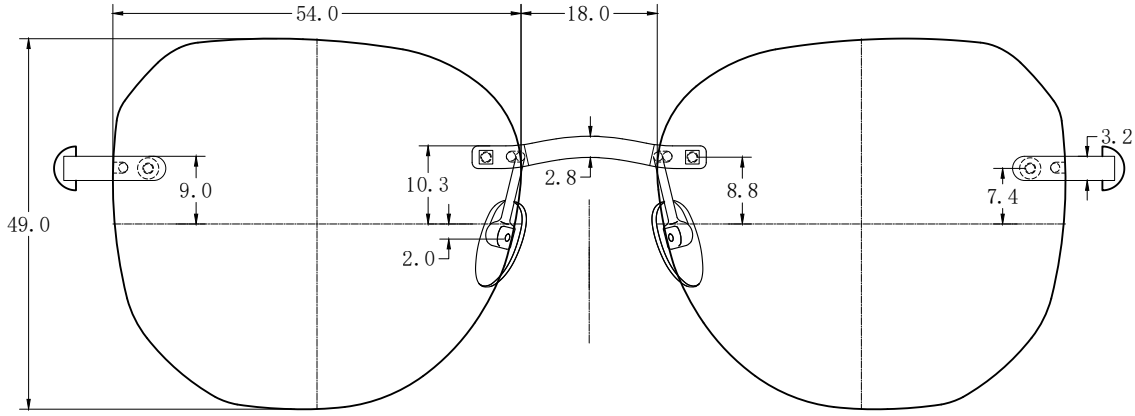

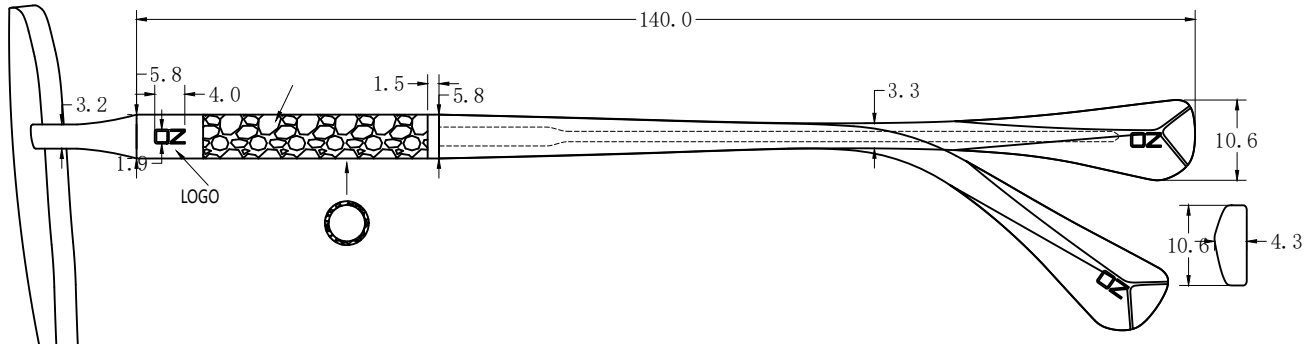

eye to eye	STYLE: MANAR	SIZE: 54-18-140	2025. 10. 01